LULL

422 Series

HIGH-LIFT

OWNER'S GUIDE

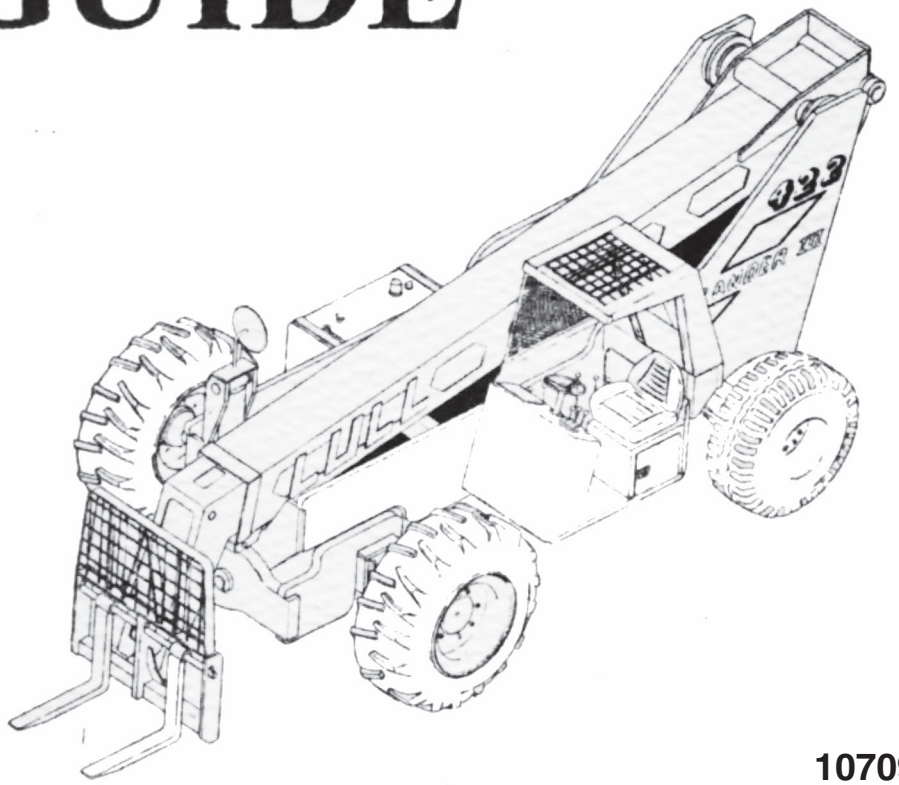

10709937

PREFACE

This ~~Operator's~~ Manual has been compiled by the LULL ENGINEERING COMPANY, INC. of St. Paul, Minnesota, to give instructions for the operation and maintenance of Lull High-Lift Loaders.

NOTE: This book belongs to the machine and should always be AVAILABLE TO THE OPERATOR.

Read the Operator's Manual carefully to become familiar with the operation and preventive maintenance forthis machine. It is very important that the operator know the DO'S and DON'TS for safety sake and to prolong the life of the machine.

Maintenance instructions must be carried out conscientiously for the machine to give good service. If prescribed maintenance is not carried out, performance may be adversely affected and warranty claims may be rejected by LULL ENGINEERING or it's Distributor/Dealer.

When replacement parts are required, insist on genuine LULL parts from your Dealer as extensive damage could occur from the use of inferior quality parts.

When contacting your Distributor/Dealer about your machine - always give Machine Model and Serial Numbers.

In accordance with the Company's policy of continuous improvement to it's machines, alterations in specifications of machines may be made at any time without notice and the Company does not accept responsibility for any discrepancies, which may occur between the specifications of it's machines and the description contained thereof in it's publications.

The machine you are about to operate should serve you well, if you adhere to the guidance given in this Operator's Manual.

We are proud to have you as a customer and feel you will be proud to be a LULL owner.

This machine was checked and tested before shipment, but due to jolts and vibrations during shipment, it should be thoroughly checked upon delivery. A thorough inspection should be made of all nuts, bolts and hose connections. Tighten where necessary, check all parts for breakage, and check for oil leaks. Oil levels should be replenished if necessary, and should be maintained at check plug levels at all times. Lubricate all points as shown on the lubrication chart and follow the lubrication chart instructions thereafter. Also, be certain that the tires are properly inflated. Special attention should be given to the hydraulic system. It's failure could result in danger to the load and to persons and property in the immediate area. Any oil leak should be repaired and all worn hoses or bad fittings should be replaced. It is essential that these parts are replaced with genuine LULL ENGINEERING COMPANY parts and no other.

SAFETY PRECAUTIONS

When operating heavy equipment the efficient operator will be guided by the simple fundamental rules of safety. Always take the necessary precautions to assure the safety of fellow workers as well as yourself. Avoid careless operating habits which may cause injury to personnel and damage to machinery and equipment.

Also replace any Caution, Warning, or Instruction Decal that is not readable or missing.

To avoid accidents the following general safety rules and precautions should be observed.

GENERAL

Always check overhead clearance and high voltage lines when transporting the machine. Observe all local regulations.

Keep step and cab floor clean and free from grease, ice and mud to prevent accidents by slipping.

Keep all shields in place.

Always use safety lights and emblems to comply with all applicable regulations when equipment is being driven on the public highway.

If necessary to start or run the engine in an enclosed area be sure to provide adequate ventilation. EXHAUST FUMES CAN KILL.

As a safety precaution it is recommended that a fire extinguisher be carried on the unit at all times.

BEFORE OPERATION

Read this Operator's Manual and learn your machines operating and maintenance characteristic capacities and limitations. Know what operating clearances your machine requires.

Learn the location and function of all controls, indicators, warning devices and caution instructions. The function of each individual lever is noted on each knob.

Make sure all controls are in neutral before starting the machine.

All hydraulic valves are balanced and spring-loaded to return to neutral when the operator's hand is removed from the lever. The valves are of the throttling type and regulate the speed of the movements, i.e., a load can be raised or lowered faster or slower by the amount that the lever is moved.

BEFORE OPERATION (Continued)

Start the engine only from the operator's seat. It is a good practice to give warning before you start up.

Only one person - the operator - should be on the machine when it is started or operated.

After the engine is running, the operator should familiarize himself with the instant reverse transmission and operate both gears in Hi-Low range.

The operator should make sure that all individual functions, function properly before the machine is put into service.

Daily extend and retract Frame Side Tilt Cylinder fully and slowly until the By Pass Valve releases to let any trapped air out of the Cylinder. Trapped air in the Side Tilt Cylinder can cause the machine to lean to one side or the other.

DURING OPERATION

Never attempt to lift more than the Manufacturer's recommended capacity on the Load Chart with this machine.

Never operate the machine controls unless you are in the operator's seat.

Never jerk the controls or use fast movements.

Never carry passengers on the machine.

Keep machine well back from the edges of excavations. NEVER undercut the machine. If necessary provide adequate shoring to prevent the machine from falling into the excavation.

Move the machine away from the banks or excavations before shutting down for the day.

Check out the surface on which you will be operating ... dirt, gravel, mud, snow or ice. Watch out for slippery or soft spots on an otherwise smooth surface.

Always be on the alert to avoid wheel spinning as it causes excessive tire wear.

Never operate on grades where stability of the machine is adversely effected.

Always adjust your speed taking into account the circumstances in which the machine is being operated. Maintain a low speed when crossing ditches, rough ground or slopes. When turning NEVER exceed the recommended speeds.

DURING OPERATION (Continued)

Should the machine start slipping sideways on a hill, turn it downhill immediately.

Keep in gear when moving downhill, NEVER coast in neutral.

Avoid fast turning speeds especially when the Fork Carriage is fully loaded.

Always check overhead clearances especially overhead power lines before operating the machine. Do not operate near live power lines.

Do not travel with Carriage raised. This will prevent sway and lessen the possibility of spilling the load.

Always be watchful of bystanders when operating the machine.

Keep hands off of the hydraulic controls except to operate them. Do not use them for a hand rest.

Always level machine before lifting. Use Frame Tilt Mechanism in lifting loads on lateral slopes up to 12 Degrees. Do not attempt to correct the level at heights.

Observe and control the Fork Carriage position at all times to prevent the load from falling unexpectedly and causing injury.

When lifting a load, the center of the load must not be more than 24 inches from the heel of the fork. The operator must also be very careful to have the load divided evenly between the forks, so that he does not lift the load with one fork.

If the pallet is overloaded or frozen down, the operator must not attempt to break the load loose or tilt it back with the tilting cylinder, as this may bend the forks.

The operator must be careful not to extend the forks so far under a load, that he gets into the next pallet in the stack. This may result in a temporary overload and also bend the forks.

When approaching a scaffold with a load to be raised a considerable height, the lowest gear and low engine R.P.M. must be used. Forward travel must be slow while the hoist is raising or when the load is high, since the possibility of tipping increases as the load is raised.

Never lift a load above the heads of workmen or over vehicles.

Remember this is not a towing tractor. Do not tow heavy vehicles, expecially heavy trucks, ready-mix trucks and other heavy vehicles.

AFTER OPERATION AND SERVICING

Lower Fork Carriage to the ground, shut off engine and apply the parking brake. Remove the starter key when leaving the machine unattended.

Park on level ground whenever possible. If you must park on a slope, park machine at right angles to the slope.

Never refuel the machine while the engine is running or near an open flame.

Never lubricate, service, or make mechanical adjustments while the unit is in motion or the engine is running.

When checking engine coolant, always remove the radiator cap very slowly, and with care when the engine is hot. Never add cold water directly into a hot cooling system.

Never tighten hydraulic hoses and/or make repairs to the hydraulic system while the system is under pressure with the engine running.

Fluid escaping under pressure from a very small hole can be almost invisible. Use a piece of cardboard or wood to search for possible leaks. NEVER use your hands to detect pressure leaks.

If you are injured by escaping fluids see a doctor at once. Serious infection or reactions can develop if proper medical treatment is not administered immediately.

REMEMBER "SAFETY" IS ONLY A WORD UNTIL IT IS PUT INTO PRACTICE - ACCIDENTS ARE CAUSED BY CARELESSNESS OR FAILURE TO COMPLY WITH INSTRUCTIONS. FOR SAFETY ALWAYS USE GOOD JUDGEMENT.

NOTE: LULL ENGINEERING COMPANY highly recommends that all operators have training on the proper and safe use of Highlift Equipment. Mason Contractor Association of America has a self train course available.

SPECIFICATIONS

ENGINE

Gross Power SAE @ 2000 rpm .....50.33 kw (67.5 hp)
Net Flywheel Power, SAE @ 2000 rpm .....46.23 kw (62 hp)
Make and Model .....Perkins A4.236
Type .....4-cycle diesel
No. of Cylinders.....4
Cylinder Liners.....Replaceable dry sleeve
Bore.....984 mm (3-7/8 ins.)
Stroke.....1270 mm (5 ins.)
Main Bearings.....5
Displacement.....3.86 litres (236 cu. ins.)
Compression Ratio.....16:1
Rated Engine Speed.....2000 rpm
Maximum Torque @ 1400 rpm.....241.3 N.m (178 ft.-lbs.)
Fuel Injection.....Direct type
Cooling.....Pressurized with water pump thermostat and fixed by-pass
Air Cleaner.....Dual element, dry type
Lubrication.....Pressure system with full-flow filter and replaceable cartridge
Fuel Tank Capacity.....150.0 litres (40 U.S. gals.)

ELECTRICAL SYSTEM

Voltage .....12 volt system
Alternator ..... 37 amps
Battery ..... 135 amp. hr.

POWER TRAIN

INSTANT REVERSE TRANSMISSION

Two change-speed gears compounded by a planetary reduction providing 4 speeds forward and 4 in reverse. Torque Converter provides infinitely variable speeds in each gear range.

Torque Converter ..... 11.75" single stage
2.54:1 ratio @ stall

MAXIMUM SPEEDS MPH (km/h)

Gear	Fwd.	km/h	Rev.	km/h
1	1.62	2.60	1.39	3.25
2	4.49	7.22	3.88	6.23
3	6.61	10.64	5.70	9.18
4	18.37	29.56	15.85	25.49

POWER TRAIN (Continued)

Final Drive ..... Outboard Planetary
Differential Lock ..... Standard

HYDRAULIC SYSTEM

Main System Pressure ..... 2400 P.S.I.
Steering Pressure ..... 1750 P.S.I.

BRAKES

Type ..... Fully enclosed wet disc. mechanical actuation
Location ..... Inboard on drive axle
Size ..... 8-3/4" (222 mm) diameter with 350 sq. inches of braking surface
Control ..... Foot operated individually

STEERING

Type ..... Hydraulic
Turns Lock to Lock 4
Cylinders ..... Two double-acting connected directly to spindle arms

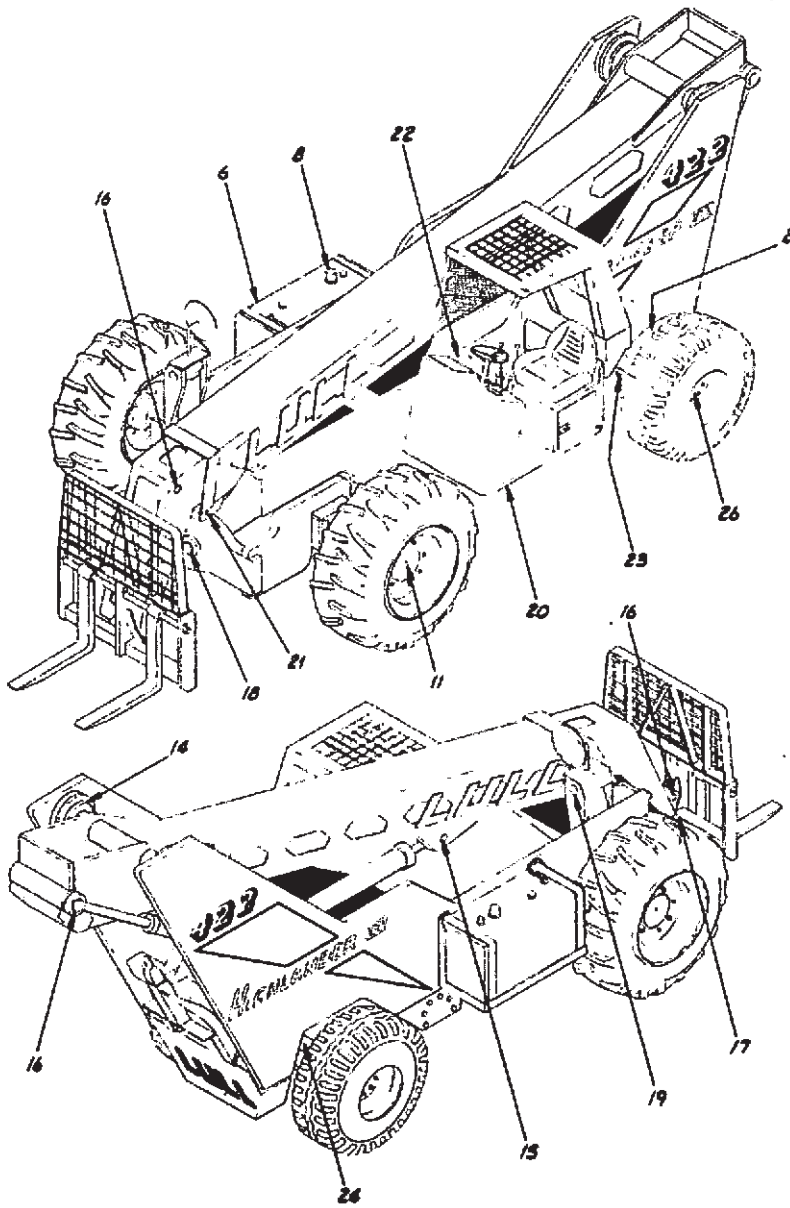

SYSTEM CAPACITIES

ENGINE CRANKCASE W/FILTER	8 QTS.
DIFFERENTIAL & TRANSMISSION	11 GALS.
PLANETARY HUB (EACH)	1.5 QTS.
COOLING SYSTEM	11 QTS.
HYDRAULIC SYSTEM & RESERVIOR	27 GALS.
FUEL TANK	40 GALS.

FRONT TIRE - 16.9-24, 10 PLY	PER TIRE
CALCIUM CHLORIDE	200 LBS.
WATER	55 GALS.
MAXIMUM TIRE PRESSURE, COLD	32 PSI.
REAR TIRE - 15-19.5, 12 PLY	PER TIRE
MAXIMUM TIRE PRESSURE, COLD	70 PSI.
FRONT TIRE (TOWING) 14.00-20, 8 PLY	PER TIRE
MAXIMUM TIRE PRESSURE, COLD	40 PSI.

LOCATION ITEM	ITEM DESCRIPTION	MAXIMUM HOURLY OPERATION TIME INTERVALS: FIRST 20 HRS.	10 HRS.	40 HRS.	100 HRS.	200 HRS.	500 HRS.	1000 HRS.	LUBRICATION AND FILTER PART NUMBERS: RECOMMENDED VISCOSITY SAE 30 ABOVE 90°F	SAE 20 90°-32°	SAE 10 BELOW 32°
1	ENGINE OIL	CR	INSP		CR				MIL-L-46152		
2	ENGINE OIL FILTER	CR			CR				USE P20995		
3	FUEL FILTER					INSP	CR		USE P22001 (FOR S/N 102 & 104 USE P21001)		
4	TRANSMISSION & DIFFERENTAL	CR		INSP			CR		M-1127 OR AMOCO 1000		
5	TRANSMISSION FILTER	CR					CR		USE P19868		
6	HYDRAULIC RESERVIOR		INSP					CR	MOBIL DTE-15		
7	HYD. RESERVIOR FILTER						CR		USE P19801		
8	HYD. TANK BEATHER					CLN		*CR	*USE P18819 FOR S/N 101-		
9	AIR CLEANER				CLN			CR	USE P12179		
10	RADIATOR COOLANT				INSP			CR	PERMAGUARD ANTI-FREEZE		
11	PLANETARY HUB					INSP		CR	M-1127 OR AMOCO 1000		
12	MASTER BRAKE CYLINDER					INSP			DOT 3 BRAKE FLUID		
13	BATTERY					INSP			DISTILLED WATER		
UNDER DUSTY OR SEVERE OPERATION - SERVICE 2 TIMES MORE OFTEN									ZERK QUANTITY PER ITEM		
14	BOOM PIVOT		INSP						SUPER PERMALUBE		4
15	HOIST PIVOT		INSP								2
16	TILT CYLINDER PIVOT		INSP								4
17	CARRIAGE PIVOT		INSP								1
18	OSCILLATION PIVOT			INSP							4
19	FRAME TILT PIVOT			INSP							2
20	BRAKE PEDAL PIVOT			INSP							2
21	BOOM ROLLERS			INSP							4
22	BOOM CONTROL LEVERS			INSP							2
23	STEERING CYL. PIVOT			INSP							4
24	STEER AXLE PIVOT			INSP							2
25	SPINDLE			INSP							4
26	WHEEL HUB			INSP					SUPER PERMALUBE		2

INSP = INSPECT PROPER LEVELS AND ADD LUBRICATION IF NECESSARY.
CR = CHANGE LUBRICANT AND REPLACE FILTER.
CLN = CLEAN ITEM WITH CARE TO DISCHARGE DUST, ECT.

ALL FLUID SYSTEMS SHOULD BE INSPECTED AND CHANGED WHENEVER OIL SHOWS TRACES OF CONTAMINATION OR HIGH OPERATING TEMPERATURES EVIDENCED BY STRONG ODOR, DISCOLORING OR SEPARATION.

WIL Engineering Co., Inc. ST. PAUL, MINNESOTA 55121

DRAWN BY JEFF DAUB

LUBRICATION SCHEDULE
MODEL 422

INSTANT REVERSE TRANSMISSION

DESCRIPTION

The Instant Reverse Transmission consists primarily of a Torque Converter, a pair of hydraulically actuated multiple disc clutches, a two-speed sliding gear transmission, and a dual range planetary assembly. When the front clutch is engaged, the output shaft turns engine-wise and in most applications this produces forward motion. The rear clutch is driven by a simple gear train and its rotation is opposite to the front clutch. Therefore, when the rear clutch is engaged, the output shaft turns anti-enginewise and in most applications this produces rearward motion.

The power is transmitted from the engine to the Transmission through a torque converter. The use of a torque converter has two distinct advantages. First, the converter is essentially a fluid drive, there being no direct mechanical connection through it. This feature creates a very smooth and shock-free drive with the elimination of engine stalling and lugging. Secondly, the converter multiplies torque, but only during heavy pull-down loads. When loads are light, the converter transmits the engine power directly at almost engine speed and there is no torque multiplication. The net result is an action like a transmission, with infinitely variable and automatic speeds ratios. The need for shifting gears, although present, is greatly reduced.

CAUTION: The clutches are not power absorbing members and must not be subjected to slippage under power.

The clutches are hydraulically applied and spring released. Each clutch has six friction plates which have sintered bronze facings and six reaction plates of polished steel. Because the clutches are hydraulically controlled, there is automatic compensation for normal wear - no adjustment is necessary.

OPERATION

Like all mechanical equipment, the Instant Reverse Transmission will need attention and servicing. Routine checks will help prevent down-time. The operator can aid in preventive maintenance by keeping a watchful eye; reporting weak or borderline malfunctioning.

Because the unit operates "in" oil and "by" oil, most of the maintenance is concerned with oil replenishment and oil cleanliness.

RULES OF OPERATION

1. Check oil level daily, stopping engine before check. Make sure area around oil fill is clean before removing dip stick.

2. Always shift the Transmission to neutral before starting the engine, or when the vehicle is parked and the engine is running.

RULES OF OPERATION (Continued)

3. Engage forward and reverse clutches at idle speed only. The clutches are not power absorbing members and must not be subjected to slippage under pressure.

4. Use brakes to slow or stop motion before applying the opposite clutch.

5. If the oil temperature gauge which is the converter oil "Out" temperature rises above 250°F., stop the vehicle immediately. Shift Transmission to neutral and run the engine at 1000-1200 R.P.M. The temperature should drop rapidly to the engine water temperature (within minutes). If the temperature does not drop, trouble is indicated. The cause of trouble should be determined before further operation of the vehicle. Generally when overheating does occur, it is due to rapid reversals in the higher gear ratios. Shifting to a lower gear will help eliminate overheating due to this cause.

6. Do not shut off the engine when the unit is overheated.

HYDRAULIC SYSTEM

NOTE: ALWAYS CHECK HYDRAULIC OIL LEVEL WITH BOOM LOWERED AND RETRACTED

COLD WEATHER GUIDELINES:

1. Always allow sufficient warm-up time before actual machine operation.
2. Never subject the machine to high RPM's during warm-up.
3. As the hydraulic system warms up, "gently" cycle all hydraulic functions to displace the cold oil.
4. When operating in conditions below 10 degrees F., a cold weather hydraulic oil should be used. (We recommend Amoco Rycon MV or equivalent).

AVOIDING PUMP FAILURES:

The main symptoms to watch for are excessive system temperatures and noise. These usually indicate a defective pump. Also watch the overall performance of the system. If the equipment operates a little slower, less powerfully, or is less responsive, it's time to check the system for flow rate and pressure. This check should be made with the engine at speed, and under load.

Some other items that can cause poor performance and eventual pump failure are listed here. These should be checked periodically.

1. Reservoir - Check the fluid level at reasonably close intervals to be sure it is up to the full mark. If the level is going down faster than usual, there's probably a leak somewhere in the system.
2. Inlet Line - A bit of debris may have plugged the inlet pipe preventing sufficient fluid from reaching the pump. Frays and kinks in the inlet line can also restrict the fluid supply. Be sure the inlet line is secure and leak proof.
3. Return Line Filter - The return line filter should be checked frequently and cleaned or replaced as necessary. This is especially true when the vehicle is operated in dirty work locations.

AERATION AND CAVITATION:

Aeration and cavitation are two distinct phenomena that can occur in hydraulic systems, causing noisy operation, erosion of metal and accelerated wear. While their effects are similar, they have different causes and require different corrective action.

AERATION - Aeration is the presence of free air in the hydraulic fluid. Practically all commercial fluids contain up to ten percent air in solution and can dissolve more air under increased pressure.

CAUSES OF AERATION

1. Damaged inlet line; loose or defective fittings or seals at component.
2. Damaged return line; loose or defective fittings or seals at component.
3. Damaged or worn cylinder rod, packing or seals.
4. Cracked junction blocks, tees or piping.
5. Fluid level too low. This can cause vortexing at pump inlet reservoir, thus drawing in air.
6. Air trapped in filter with no means of bleed off.
7. Leaking shaft seal on the pump.

The cause of aeration should be found and corrected to prevent premature failure of the pump or breakdown of the fluid's lubricating ability.

CAVITATION - Cavitation is a vacuum in the fluid. Cavities occur when the components don't completely fill. It can also occur in motors or cylinders where the load overruns the delivery from the pump. Cavitation is prevalent in the pump when the inlet conditions are critical. The characteristic sound of cavitation is a highpitched "scream" and this noise increases with the degree of cavitation and with increased operating pressure. This is caused by the implosion of the cavities or voids in the fluid.

CAVITATION EFFECTS - Typical effects of cavitation are eroded end plates (as shown by pitting between the inlet and outlet port), a rippled ring with the vanes worn flat of the ends and pitting around the ports in the inlet quadrant of the cam ring. In short, the effects are much the same as aeration.

CAUSES OF PUMP CAVITATION - Pump cavitation may be caused by a restriced inlet line, or a clogged inlet filter. This can be avoided by momentarily cracking the reservoir cover whenever the machine is started up cold. Cavitation from fluid that is too thick sometimes is avoided by operating at reduced pump speed until the fluid is warmed up and becomes less viscous.

Whenever cavitation is detected, it should be corrected or the life of the pump will be shortened. When cavitation is suspected, a vacuum gauge should be installed at the pump inlet to determine if corrective action is required.
Pump noise generally indicated cavitation caused by restricted inlet supply, excessive fluid aeration, or worn internal parts.

How To Fill the Hydraulic Tank and System: Fill the tank full of hydraulic oil, then have the operator extend and retract every cylinder on the entire system, checking oil and filling after extending and retracting each cylinder. This also includes the four steering cylinders. Turn them from extreme right to extreme left position and back to center. After all cylinders and the hydraulic system is full of oil, fill the supply tank per dipstick indicator. Never run the machine with oil below the low level in the supply tank.

Never run the engine unless the hydraulic tank and the complete hydraulic system is full of oil.

When hydraulic fluid is added to the system, always pour it through a micron filter. NEVER filter the hydraulic fluid with cloth because lint particles may be added to the system. If a micron filter is not available, use a funnel with a fine wire screen (at least 200 mesh) inserted in the small end.

Be certain that the hydraulic fluid meets the specifications as listed in the lubrication chart.

If an air pocket should occur in cylinders, the oil can be replaced by working the control lever until by-pass flutter is heard in full forward or full back position.

Axle stops are preset at the factory. If it becomes necessary to remove steering cylinders, the stops must be readjusted.

WHAT TO DO IF A PUMP OR MOTOR FAILS

If a pump stops suddenly, it is almost certain that a major internal pump part has failed. The only solution to this is to examine the pump and rebuild or replace it as necessary.

After the pump has been repaired or replaced, the reservoir must be drained and the oil thown away. The reservoir must be flushed to remove all contamination. Cylinders and valves should be inspected for wear.

Filters must have new cartridge elements installed. Any return lines without filters should have auxiliary filters installed of at least 25 micron rating, adequate to handle maximum flow encountered, without bypassing. The system should then be started up. After 40-50 hours any auxiliary filters may be removed.

A good preventive maintenance program includes periodically draining and cleaning the reservoir and flushing with a solvent compatible with the hydraulic fluid being used. Periodic inspection and sampling of fluid will dictate whether flusing the system is required.

A sample of fluid that is representative of that in circulation should be taken (not from the bottom of the reservoir). If it is cloudy, off-color, contains suspended sediment, or if on standing, shows seperate sediment or liquid layers, then changing the fluid charge is recommended. Prior to installation of a new fluid charge is an ideal time to clean and flush the system.

RESERVOIR CLEANING

The reservoir in a hydraulic system is a settling basin for any contamination. Although there are other places in the plumping where contaminants may accumulate, the reservoir is usually where the majority of them will settle. If inspection shows that the fluid is in poor condition, the fluid should be drained and the reservoir cleaned.

FLUSHING SYSTEM

If contamination is evident in fluid samples, then chances are accumulation has occurred somewhere within the plumbing. The only way to effectively remove accumulated contaminants and thoroughly clean the entire system is by flushing. This is done by circulating a small percentage of special petroleum solvent cleaner with the fluid charge long enough to loosen and remove the deposits. The fluid should then be drained while it is hot, the reservoir cleaned manually as previously outlined, and the system flushed.

The most effective way to clean a hydraulic system is to first drain the dirty fluid from the system; then clean the reservoir and add clean fluid with the solvent added. Flushing is usually most effective at about 150 degrees F. The fluid should remain in the system from 10 to 50 hours depending on the condition. A careful watch on the filters will indicate when the system is clean.

After removing the flushing liquid used for cleaning, it is recommended to flush the system first with clean hydraulic fluid to pick up the remaining cleaner. Then drain the system again and check filters and bottom of the reservoir.

SAFETY SYSTEMS

Lull Hi-Lift Loaders are equipped with a hydraulic safety system on the frame tilt, hoist, carriage tilt, and boom extension cylinders. This prevents hazardous results due to a line breakage or the rupture of a tube or fitting. Even though this system has been added to provide maximum safety to the operator and all that surrounds him, a series of checks should be made daily to assure that the system is in good operable condition. These checks should be made in a safe environment, clear of buildings, other equipment, people, etc. Make the checks in a set sequence prior to the machine's daily usage.

1. Without starting the machine, move the frame tilt control lever in both directions. If the system is working, the machine will stay in its set position without any sway to the left or right. It is recommended that the boom be lowered and free of any load during this check.

2. With the engine on, lift a load with the front forks level. Lift it approximately 4 to 8 feet above the ground, keeping within the capacity of the weight to height ratio of the particular model. With the load elevated and engine off, move the control lever for the carriage tilt in both directions. If in good operable condition, the forks will stay level, thus preventing the load from tilting downward.

3. Check the hoist cylinders that raise and lower the boom and the boom extension cylinder, which extends and retracts the boom, by lifting a load of approximately 1500 lbs. to an elevation of 25 feet with the boom fully extended and shut off the engine. Move the joystick control handle forward to lower the boom and to the left to retract it. This will determine whether or not these functions will remain stable in an emergency.

4. Other safety devic es, the horn and the back-up alarm, should be checked daily. The back-up alarm is activated by shifting the transmission into reverse.

Should any of these checks fail to function properly, the machine should immediately be taken out of service and repaired. Contact your Lull Dealership or Lull Service Department for replacement parts for this system.

Wiring Diagram

Model 422

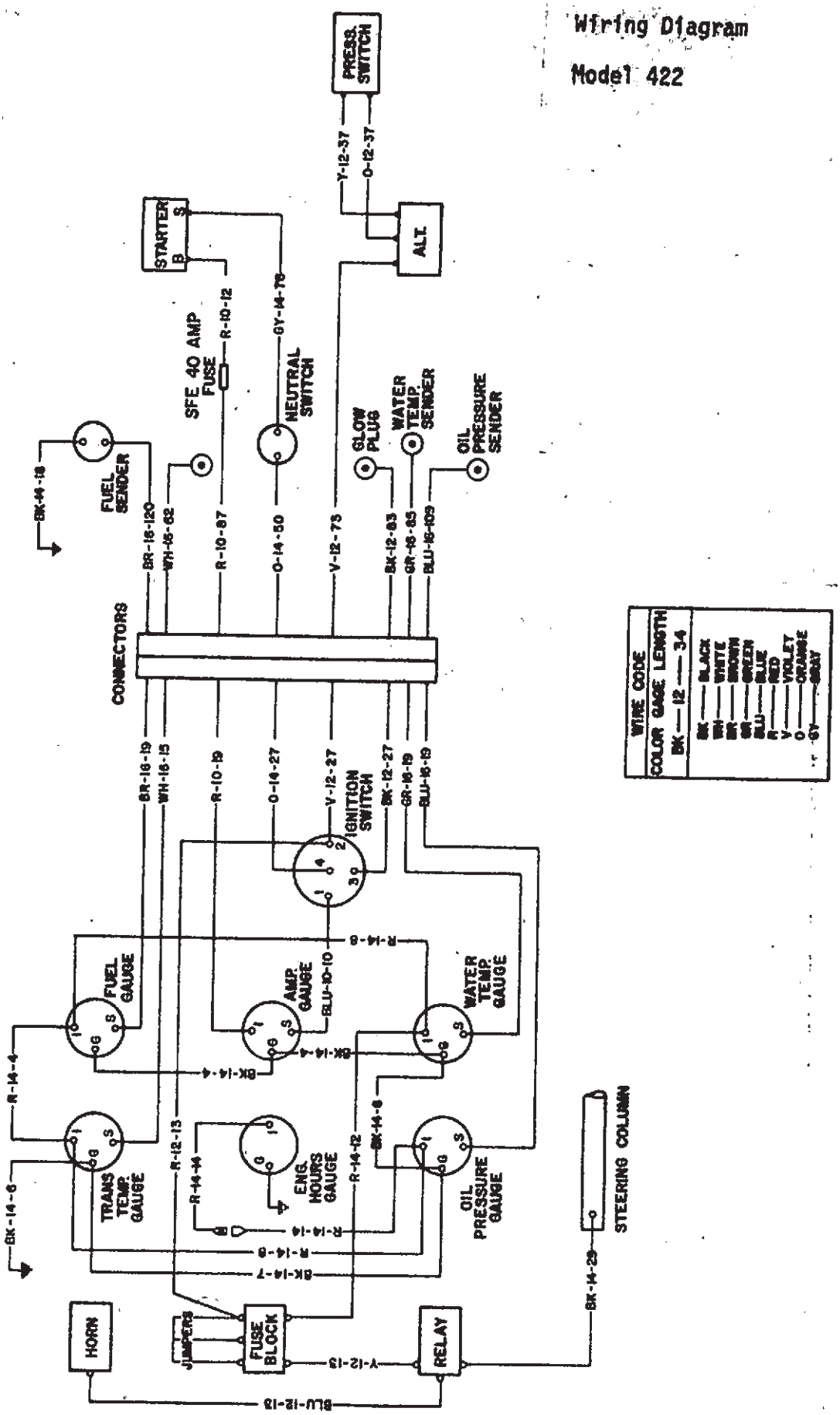

LULL *Engineering Co., Inc.*

FORK SAFETY CHECK LIST

1 **ABRASION** – Forks are constantly subjected to abrasion, coming into contact with concrete floors, steel shelving, etc. This abrasion reduces the thickness of a fork to a point where it is not capable of lifting the capacity it was designed for. Contact your local dealer for inspection.

2 **BENT FORKS** – Forks are bent out of shape for various reasons. Depending on the degree of distortion and the resulting fatigue factors, some forks can be straightened. The fork manufacturer is best qualified to correct this. Your local dealer can make the arrangements.

3 **CRACKS** – Cracks may appear on forks where (a) attachments are welded on or (b) in the inside radius of the bend area. These cracks can be discovered by periodic inspection using Magnaflux or dye penetrant. These blemishes may be ground out and polished by approved grinding methods, depending on the depth of the crack. Contact your dealer as to the amount of material that can be removed safely and the correct method of grinding.

4 **OVERLOADING** – Persons operating lifting devices utilizing forks should be cognizant of the capacity of the device as well as the capacity of the forks. Overloading may cause permanent deformation or serious fatigue conditions. Periodic inspection as mentioned in items 2 and 3 should be carried out.

5 **USE THE PROPER FORK** – Working environments such as spark-free atmosphere, high heat furnace charging, corrosion resistance, unusual lifting conditions require custom-designed forks. Special forks are as important as the special devices they are used with. Contact your dealer for assistance in this area.

6 **REPAIR** – The repair of forks should not be undertaken by anyone other than the manufacturer. A seemingly inexpensive good repair might end in a very costly problem.

7 **MODIFICATION** – No modification should be made to forks without consulting with your local dealer

8 **REPLACE WITH QUALITY FORKS** – When you order or reorder forks, make sure you're getting high-quality forks that will perform your lifting jobs in a safe and dependable manner. Insist on forks that are forged or have an upset heel.

FORK INSPECTION SCHEDULE

For normal operating conditions, the following inspection schedule is suggested:

DAILY . . . . . Visual inspection of forks should be a daily requirement for each operator, with special attention to permanent deformation and cracks.

SIX MONTHS . . . Thorough inspection of forks for cracks and deformation should be performed at least two times per year or more, depending on the use of the equipment.

This fork safety list is intended to help reduce fork problems and is not to be interpreted as a guarantee under any circumstances.

FORKLIFT SIGNALS

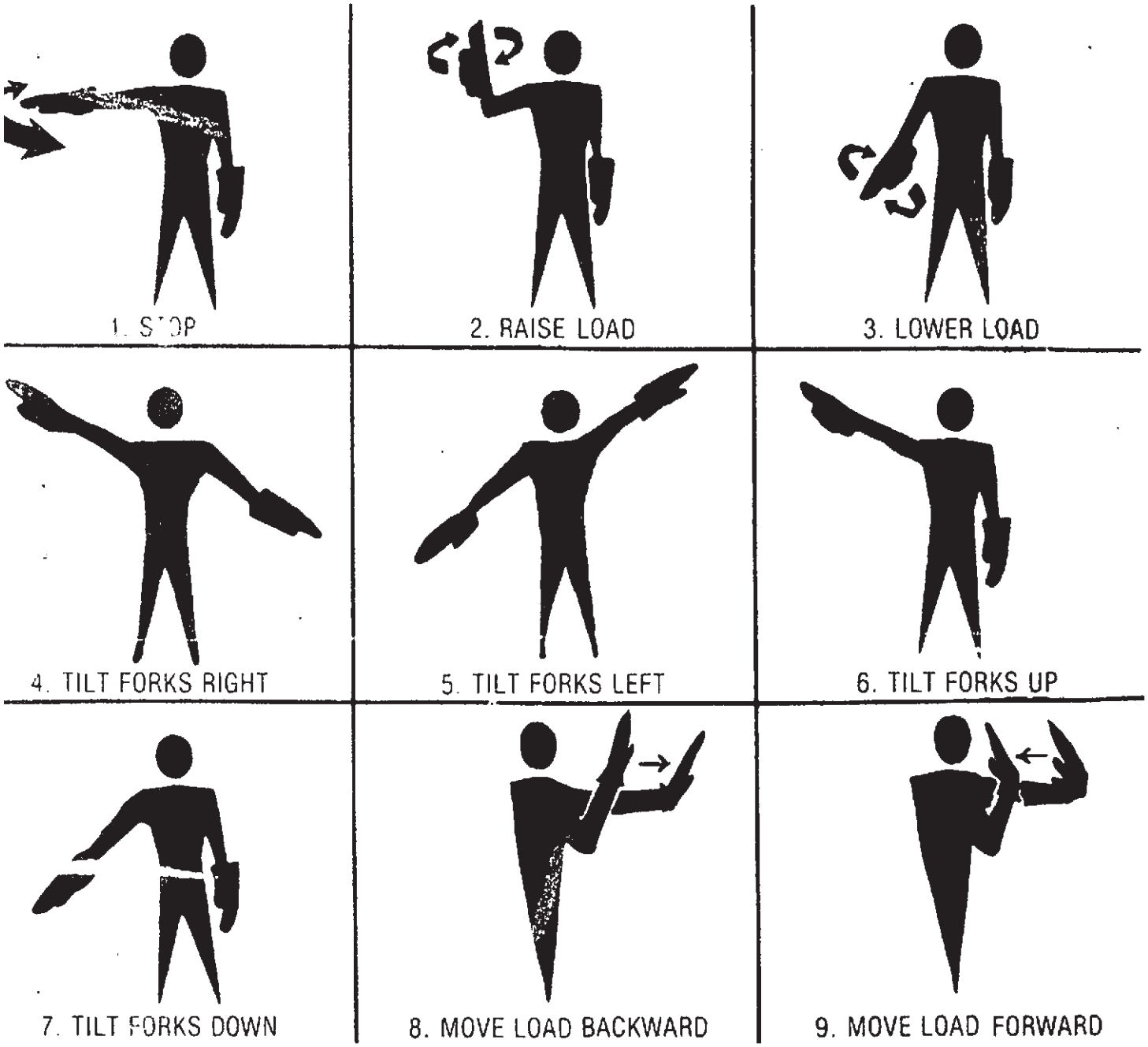

INSTRUCTIONS TO SIGNAL MEN

1. Only one person to be signalman
2. Make sure the operator can see you and is able to acknowledge the signal given
3. Signalman must watch the load—the operator is watching you
4. Never raise or lower the load over other workmen, warn them to keep out of the way

WATCH FOR OVERHEAD LINES OR OTHER OBSTRUCTIONS.

1731

SAFETY PRECAUTIONS FOR MOUNTING AND DEMOUNTING TUBE TYPE TRUCK/BUS TIRES

WARNING

Failure to comply with the following procedures may result in faulty positioning of the tire and/or rim parts and can cause the assembly to burst with explosive force sufficient to cause serious physical injury or death. Only experienced tire mechanics should undertake to service multi-piece truck rims.

SAFETY PRECAUTIONS

DEFLATION AND DISASSEMBLY

1. Always check rim/tire assembly for proper component seating prior to removing from vehicle.

2. Always deflate tire by removing valve core prior to dismounting from vehicle or disassembly of components. It is recommended that safety goggles be worn to prevent the calcium chloride from making contact with the eyes.

3. Never position body in front of rim during deflation.

4. Always follow assembly and disassembly procedures outlined in the manufacturer's instruction manual or other recognized industry instruction manuals.

5. Never use a steel hammer to assemble or disassemble rim components - use a lead, brass, or plastic type mallet. Proper tools are available through rim/wheel distributors.

RIM INSPECTION

1. Always select the proper tire size and construction to match the manufacturer's rim or wheel rating and size.

2. Never use damaged, worn, or corroded rims/wheels or mounting hardware.

3. Always clean and repaint lightly rusted rims.

4. Never use a rim/wheel component you cannot identify.

ASSEMBLY AND INFLATION

1. Always double check to see that removable rings are properly seated before inflating.

2. Always inflate tire in safety cage or use a portable lock ring guard. Use a clip-on type air chuck with remote valve so that operator can stand clear during tire inflation.

3. Never attempt to seat rings while tire is totally or partially inflated.

4. Never re-inflate or add inflation pressure to a tire that has been run flat or seriously underflated without removing and checking for ring seating and rim damage.

5. Never use an assembly with excessive side ring play, wide gaps between ring ends or butting ring ends.

6. Never hammer on components of an inflated or partially inflated assembly.

NOTE: Various types of tires on LULL forklifts are filled with a calcium chloride and water solution at the factory. This weight is necessary for proper machine counterweight when used in tires. NEVER operate a machine with un-weighted tires.

ADDITIONAL INSTRUCTIONS WITH MOUNTING AND DEMOUNTING PROCEDURES
AVAILABLE FREE FROM: U.S. DEPARTMENT OF TRANSPORTATION
NATIONAL HIGHWAY TRAFFIC SAFETY ADMINISTRATION
WASHINGTON, D.C. 20590

WARRANTY OF LULL EQUIPMENT

Manufacturer warrants new Lull products, including original equipment placed thereon, except batteries, tires, ignition and carburetion parts, to be free from defects in material or workmanship under normal use and service.

Manufacturer agrees to replace at the factory, any part or parts of such products which shall be returned to it, with transportation charges prepaid by the shipper, within six months from date of the original retail purchase, or date machine is placed in service, and, which by its examination shall disclose said parts to be defective in material and workmanship. Parts must be returned to factory within 30 days of failure.

Labor, mileage, transportation charges and other incidental costs are not a part of this warranty, and will be considered a part of distributor cost, and/or customer responsibility, except when an individual case may come under consideration by the manufacturer, and then only according to the manufacturer's discretion.

This warranty is in lieu of all other warranties, expressed or implied. This warranty neither allows not authorizes any person to assume any other liability in connection with its products.

No warranty is given with regard to second-hand units or units that have been altered, or rebuilt.

The manufacturer reserves the right to make changes in design, add improvements at any time, without incurring the obligation to install same on previously built units.